NFJO 26.11.2016 Kouvola B18-73

Competitors: 16

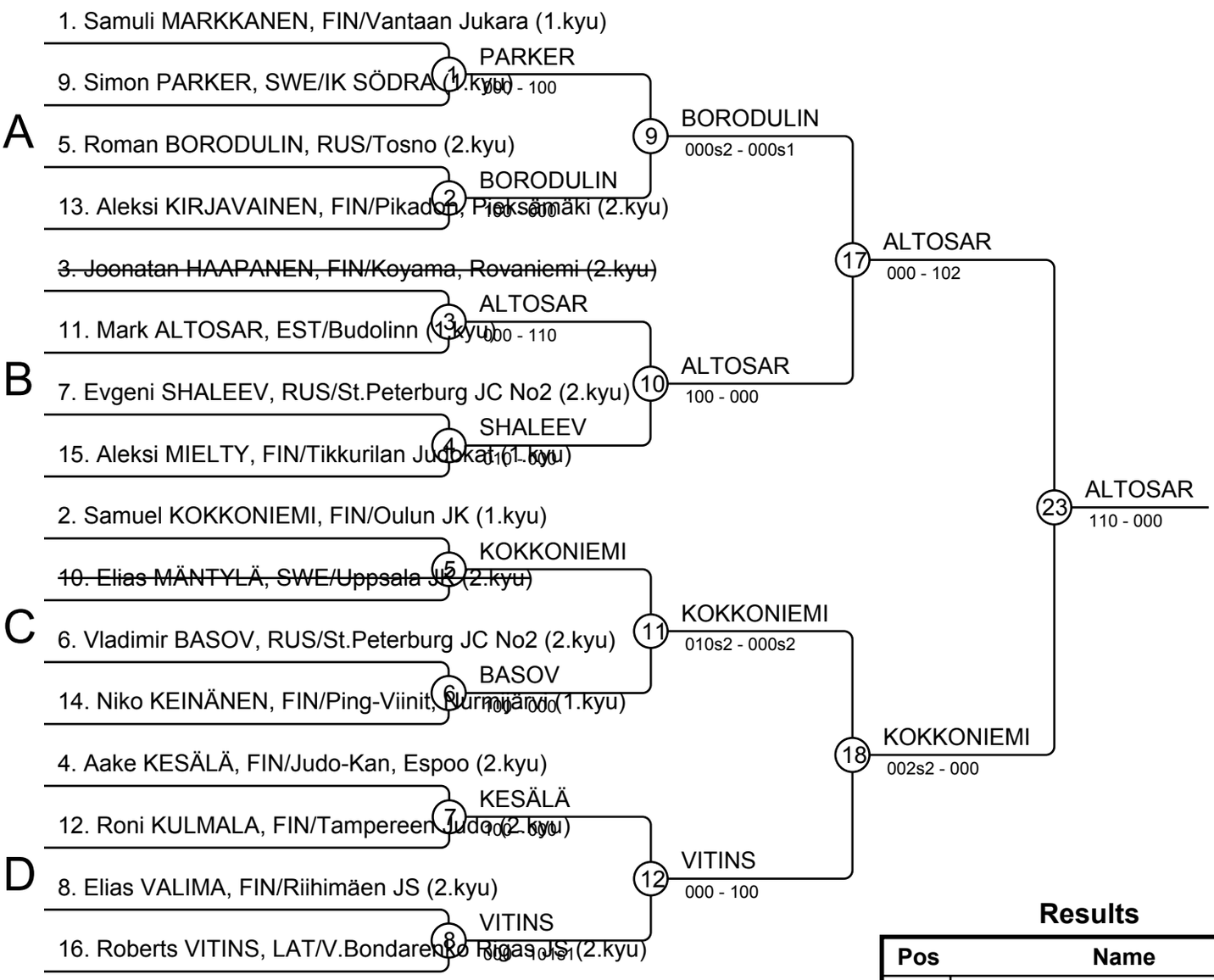

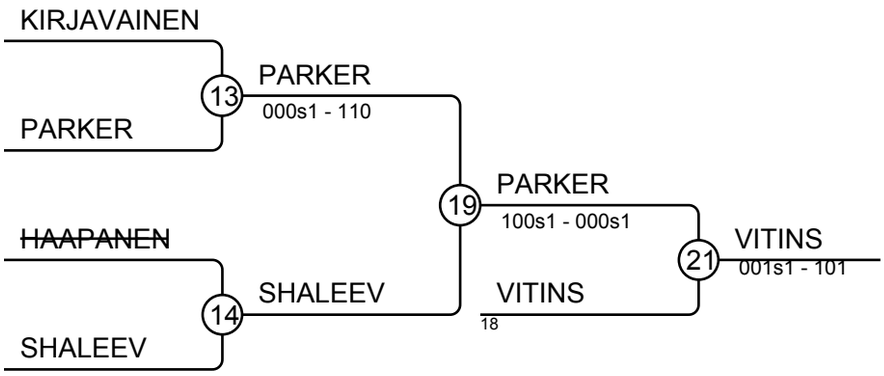

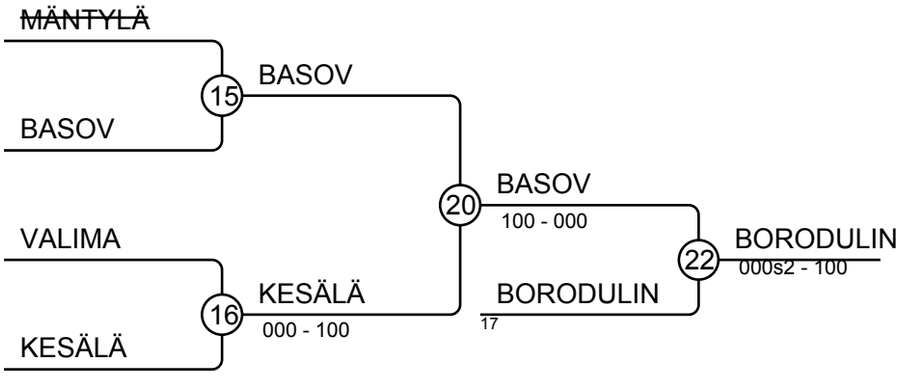

Results

Pos	Name
1	Mark ALTOSAR, EST/Budolinn
2	Samuel KOKKONIEMI, FIN/Oulun JK
3	Roberts VITINS, LAT/V.Bondarenko R
3	Roman BORODULIN, RUS/Tosno
5	Simon PARKER, SWE/IK SÖDRA
5	Vladimir BASOV, RUS/St.Peterburg J
7	Evgeni SHALEEV, RUS/St.Peterburg
7	Aake KESÄLÄ, FIN/Judo-Kan, Espoo