Baltic Sea Championships 11.3.2017 Orimattila M-73

Competitors: 15

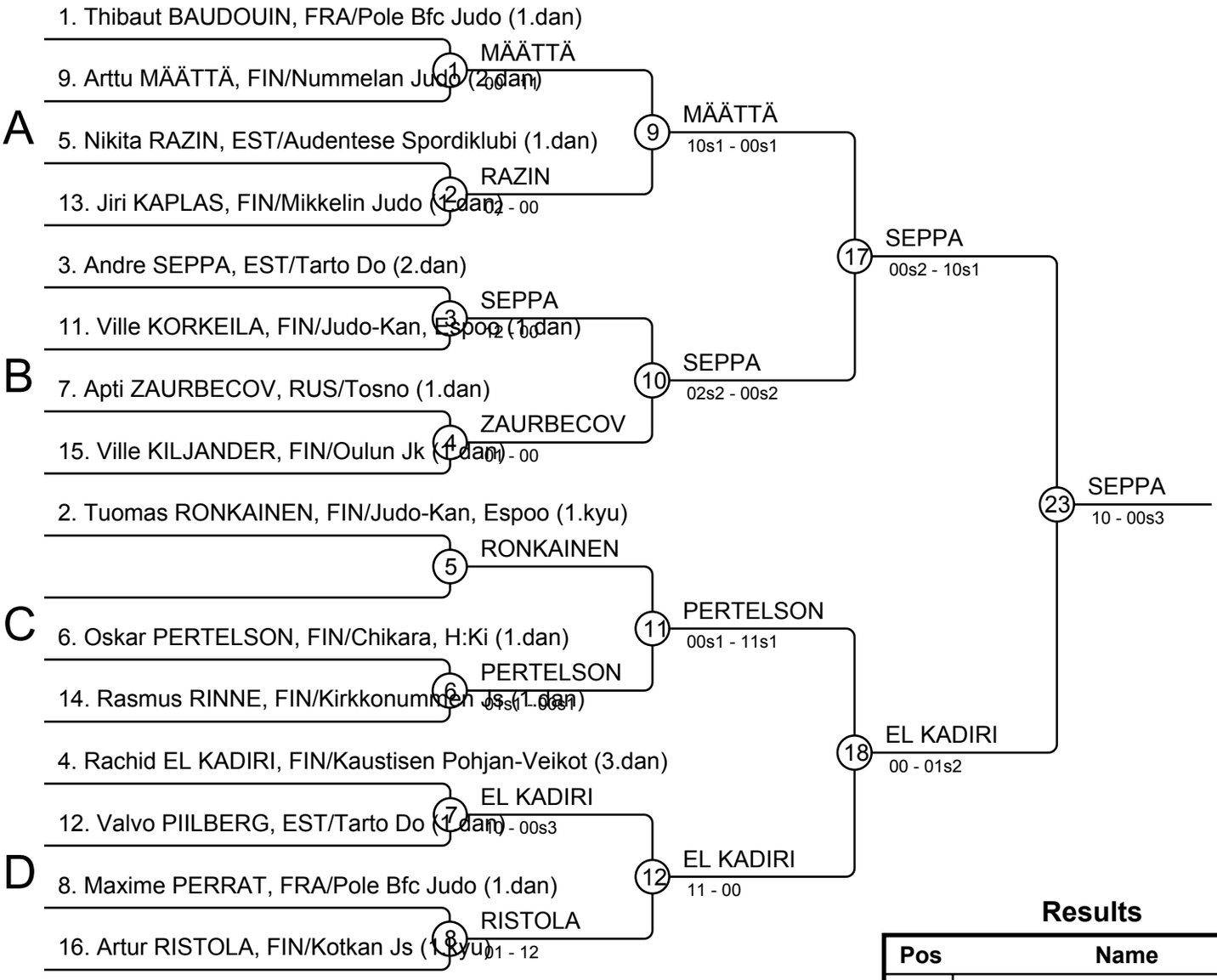

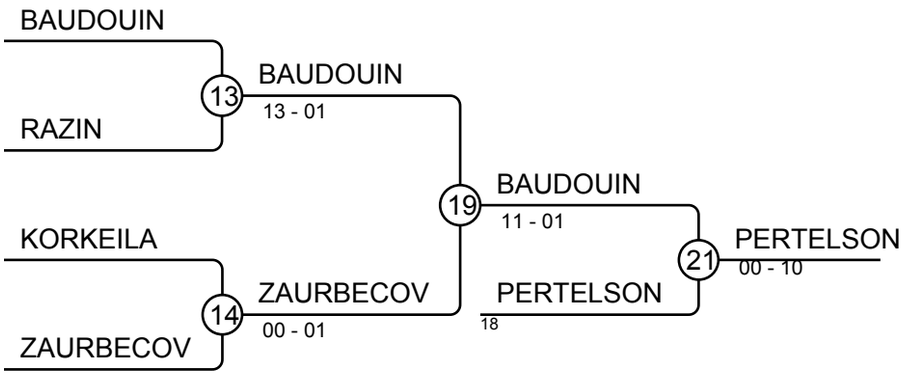

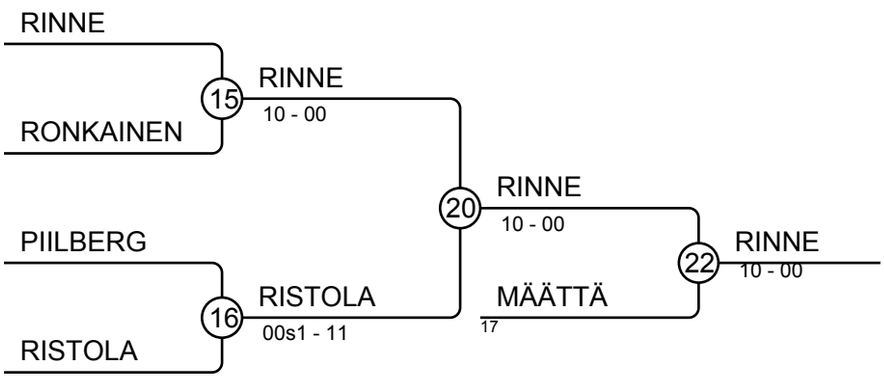

Results

Pos	Name
1	Andre SEPPA, EST/Tarto Do
2	Rachid EL KADIRI, FIN/Kaustisen Po
3	Oskar PERTELSON, FIN/Chikara, H:
3	Rasmus RINNE, FIN/Kirkkonummen
5	Thibaut BAUDOUIN, FRA/Pole Bfc Ju
5	Arttu MÄÄTTÄ, FIN/Nummelan Judo
7	Apti ZAURBECOV, RUS/Tosno
7	Artur RISTOLA, FIN/Kotkan Js