Baltic Sea Championships 11.3.2017 Orimattila P18-55

Competitors: 18

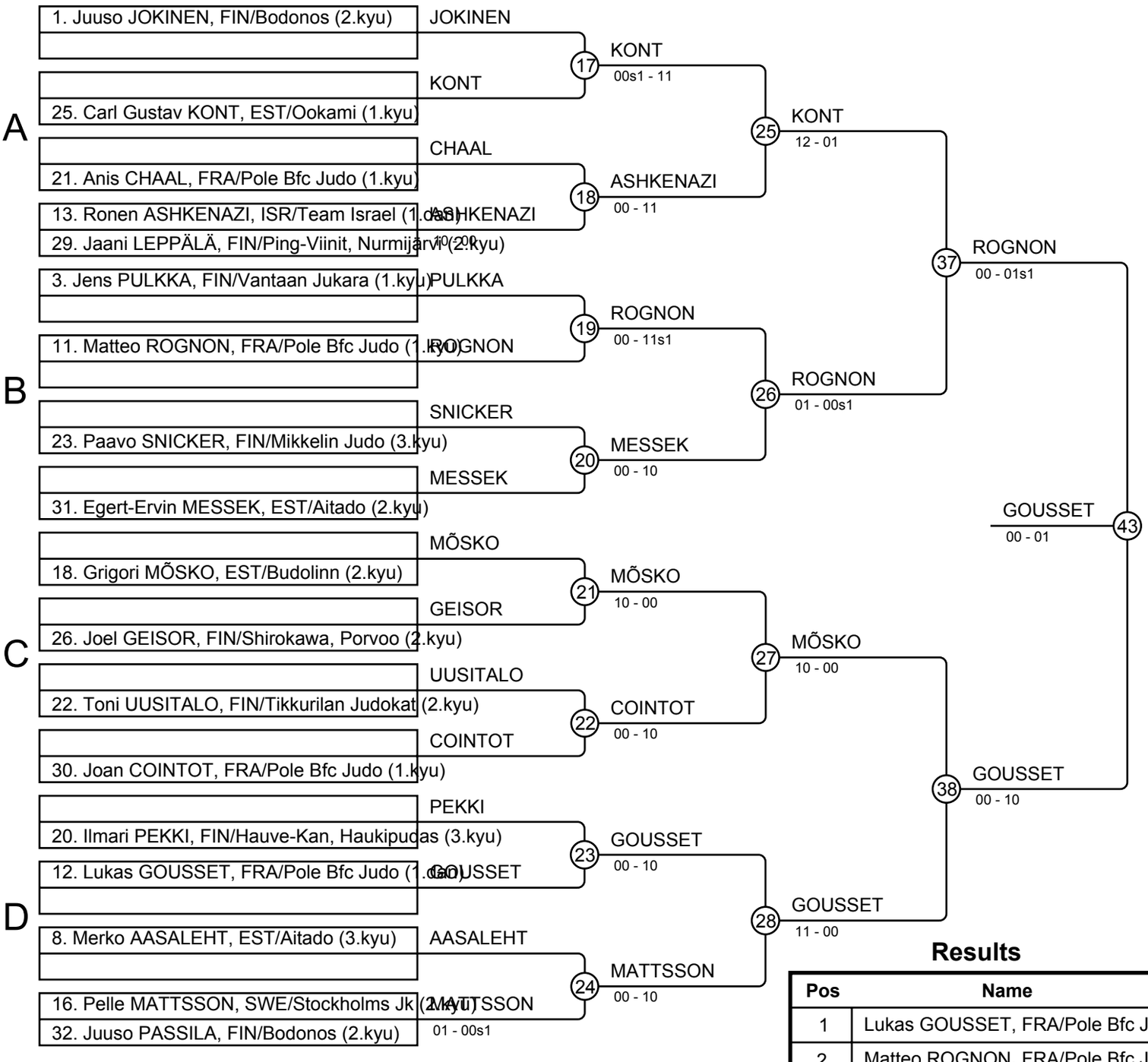

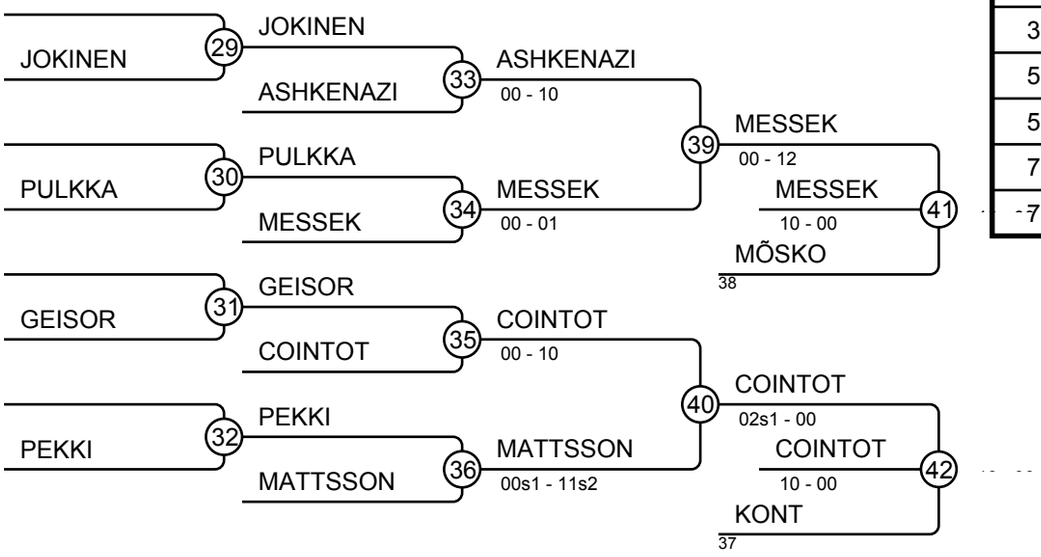

Results

Pos	Name
1	Lukas GOUSSET, FRA/Pole Bfc Judo
2	Matteo ROGNON, FRA/Pole Bfc Judo
3	Egert-Ervin MESSEK, EST/Aitado
3	Joan COINTOT, FRA/Pole Bfc Judo
5	Grigori MÕSKO, EST/Budolinn
5	Carl Gustav KONT, EST/Ookami
7	Ronen ASHKENAZI, ISR/Team Israel
7	Pelle MATTSSON, SWE/Stockholms Jk